74LVQ4066

QUAD BILATERAL SWITCH

- HIGH SPEED:
  t_{PD} = 0.4 ns (TYP.) at V_{CC} = 3.3 V
  t_{PD} = 0.1 ns (TYP.) at V_{CC} = 5 V
- LOW POWER DISSIPATION:
  I_{CC} = 2µA (MAX.) at T_A=25°C
- LOW "ON " LOW RESISTANCE
  R_{ON} = 14Ω at V_{CC} = 3.3V, $I_{I/O} \leq$ 1 mA
  R_{ON} = 12Ω at V_{CC} = 5.0V, $I_{I/O} \leq$ 1 mA
- SINE WAVE DISTORTION:
  0.04% at V_{CC} = 3.3V, f = 1KHz
- OPERATING VOLTAGE RANGE:
  $V_{CC(OPR)}$ = 2V to 5.5V
- PIN AND FUNCTION COMPATIBLE WITH 74 SERIES 4066
- IMPROVED LATCH-UP IMMUNITY

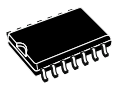

SOP



TSSOP

Table 1: Order Codes

PACKAGE	T & R
SOP	74LVQ4066MTR
TSSOP	74LVQ4066TTR

DESCRIPTION

The 74LVQ4066 is a low voltage CMOS QUAD BILATERAL SWITCH fabricated with sub-micron silicon gate and double-layer metal wiring C^2MOS technology.

It is ideal for low power and low noise 3.3V applications and each switch is designed to handle both analog and digital signals.

The switches permit signals with amplitudes up to V_{CC} (peak) to be transmitted in either direction without relevant propagation delay and without generating additional ground bounce noise.

It has an ON-Resistance which is greatly reduced in comparison with 74HC4066.

It is provided of four individual enable inputs to control the switches; the switch is ON when the C input is held high and OFF (High Impedance) when C is held low.

All inputs and outputs are equipped with protection circuits against static discharge, giving them ESD immunity and transient excess voltage.

Figure 1: Pin Connection And IEC Logic Symbols

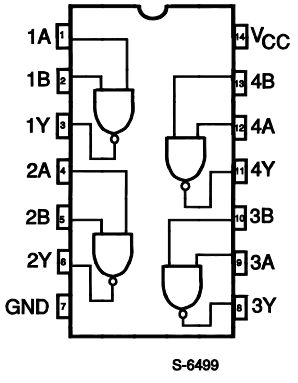

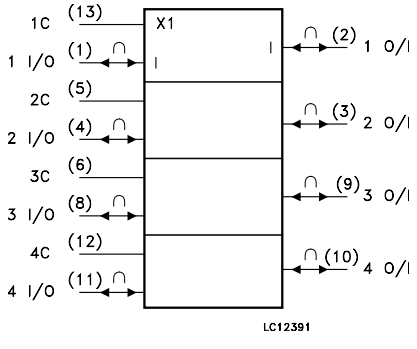

Figure 2: Logic Diagram

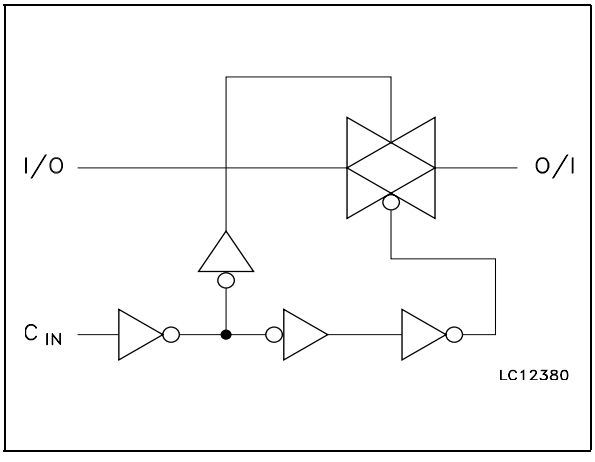

Table 2: Pin Description

PIN N°	SYMBOL	NAME AND FUNCTION
1, 4, 8, 11	1 to 4 I/O	Independent Input/Output
2, 3, 9, 10	1 to 4 O/I	Independent Output/Input
13, 5, 6, 12	1C to 4C	Enable Input (Active HIGH)
7	GND	Ground (0V)
14	V_{CC}	Positive Supply Voltage

Table 3: Truth Table

A	B
H	ON
L	OFF*

(*) High Impedance

Table 4: Absolute Maximum Ratings

Symbol	Parameter	Value	Unit
V_{CC}	Supply Voltage	-0.5 to +7	V
V_I	DC Input Voltage	-0.5 to V_{CC} + 0.5	V
V_O	DC Output Voltage	-0.5 to V_{CC} + 0.5	V
I_{IK}	DC Input Diode Current	± 20	mA
I_{OK}	DC Output Diode Current	± 20	mA
I_O	DC Output Current	± 50	mA
I_{CC} or I_{GND}	DC V_{CC} or Ground Current	± 200	mA
T_{stg}	Storage Temperature	-65 to +150	°C
T_L	Lead Temperature (10 sec)	300	°C

Absolute Maximum Ratings are those values beyond which damage to the device may occur. Functional operation under these conditions is not implied

Table 5: Recommended Operating Conditions

Symbol	Parameter	Value	Unit
V_{CC}	Supply Voltage (note 1)	2 to 5.5	V
V_I	Input Voltage	0 to V_{CC}	V
V_O	Output Voltage	0 to V_{CC}	V
T_{op}	Operating Temperature	-55 to 125	°C
dt/dv	Input Rise and Fall Time on control pin V_{CC} = 3.0V (note 2)	0 to 10	ns/V

1) Truth Table guaranteed: 1.2V to 5.5V
2) V_{IN} from 30% to 70%V_{CC}

Table 6: DC Specifications

Symbol	Parameter	Test Condition		Value							Unit
		V_{CC} (V)		T_A = 25°C			-40 to 85°C		-55 to 125°C		
				Min.	Typ.	Max.	Min.	Max.	Min.	Max.	
V_{IH}	High Level Input Voltage	2.7 to 5.5		0.7 V_{CC}			0.7 V_{CC}		0.7 V_{CC}		V
V_{IL}	Low Level Input Voltage					0.3 V_{CC}		0.3 V_{CC}		0.3 V_{CC}	V
R_{ON}	ON Resistance	3.3 (**)	V_I=V_{IH} $V_{I/O}$=V_{CC} to GND $I_{I/O} \leq$ 1mA		16.5	23		32		40	Ω
		5.0(*)			12	17		22		26	
		3.3 (**)	V_I=V_{IH} $V_{I/O}$=V_{CC} or GND $I_{I/O} \leq$ 1mA		12	17		24		30	
		5.0(*)			9.5	13		17		20	
R_{ON}	Difference of ON Resistance Between Switches	3.0 to 5.5	V_I=V_{IH} $V_{I/O}$=V_{CC} to GND $I_{I/O} \leq$ 1mA		2						Ω
I_{OFF}	Input/Output Leakage Current (SWITCH OFF)	5.5	V_{OS} = V_{CC} to GND V_{IS} = V_{CC} to GND V_I = V_{IL}			± 0.1		± 1.0		± 1.0	µA
I_{IZ}	Switch Input Leakage Current (SWITCH ON, OUTPUT OFF)	5.5	V_{OS} = V_{CC} to GND V_I = V_{IH}			± 0.1		± 1.0		± 1.0	µA
I_{IN}	Control Input Leakage Current	5.5	V_I = V_{CC} or GND			± 0.1		± 1.0		± 1.0	µA
I_{CC}	Quiescent Supply Current	5.5	V_I = V_{CC} or GND			2		20		20	µA

(*)Voltage range is 5V ±0.5V
(**)Voltage range is 3.3V ±0.3V

Table 7: AC Electrical Characteristics (C_L = 50 pF, Input $t_r = t_f$ = 3ns)

Symbol	Parameter	Test Condition		Value							Unit
		V_{CC} (V)		T_A = 25°C			-40 to 85°C		-55 to 125°C		
				Min.	Typ.	Max.	Min.	Max.	Min.	Max.	
t_{PD}	Delay Time	3.3(*)			0.4	0.8		1.2		2.0	ns
		5.0 (**)			0.1	0.2		1.0		1.8	
t_{PZL} t_{PZH}	Output Enable Time	3.3(*)	R_L = 1 kΩ		2.5	4.0		5.0		7.0	ns
		5.0 (**)			2.0	4.0		5.0		7.0	
t_{PLZ} t_{PHZ}	Output Disable Time	3.3(*)	R_L = 1 kΩ		5.0	7.5		9.0		11.0	ns
		5.0 (**)			5.0	7.5		9.0		11.0	
C_{IN}	Input Capacitance				5						pF
$C_{I/O}$	Switch Terminal Capacitance				10						pF
C_{PD}	Power Dissipation Capacitance (note 1)	3.3			2.5						pF
		5.0			3						

1) C_{PD} is defined as the value of the IC's internal equivalent capacitance which is calculated from the operating current consumption without load. (Refer to Test Circuit). Average operating current can be obtained by the following equation. $I_{CC}(opr) = C_{PD} x V_{CC} x f_{IN} + I_{CC}/4$ (Switch).
(*) Voltage range is 3.3V ± 0.3V
(*) Voltage range is 5V ± 0.5V

Table 8: Analog Switch Characteristics (GND = 0 V, T_A = 25°C)

Symbol	Parameter	Test Condition			Value	Unit
		V_{CC} (V)	V_{IN} (V_{p-p})			
	Sine Wave Distortion (THD)	3.3	2.75	f_{IN} = 1 KHz R_L = 10KΩ C_L = 50 pF	0.04	%
		5.0(*)	4		0.04	
f_{MAX}	Frequency Response (Switch ON)	3.3	Adjust f_{IN} voltage to Obtain 0dBm at V_{OS}. Increase f_{IN} Frequency until dB Meter reads -3dB R_L = 50Ω , C_L = 10pF		150	MHz
		5.0(*)			180	
	Feed through Attenuation (Switch OFF)	3.3	V_{IN} is centered at V_{CC}/2. Adjust input for 0dBm R_L = 600Ω, C_L = 50pF, F_{IN} = 1 MHz sine wave		-60	dB
		5.0(*)			-60	
	Crosstalk (Control Input to Signal Output)	3.3	R_L = 600Ω, C_L = 50pF, f_{IN} = 1MHz square wave		60	mV
		5.0(*)			60	
	Crosstalk (Between Any Switches)	3.3	R_L = 600Ω, C_L = 50pF, f_{IN} = 1MHz sine wave		-60	dB
		5.0(*)			-60	

(*) Voltage range is 5V ± 0.5V

Figure 3: Switching Characteristics Test Circuit

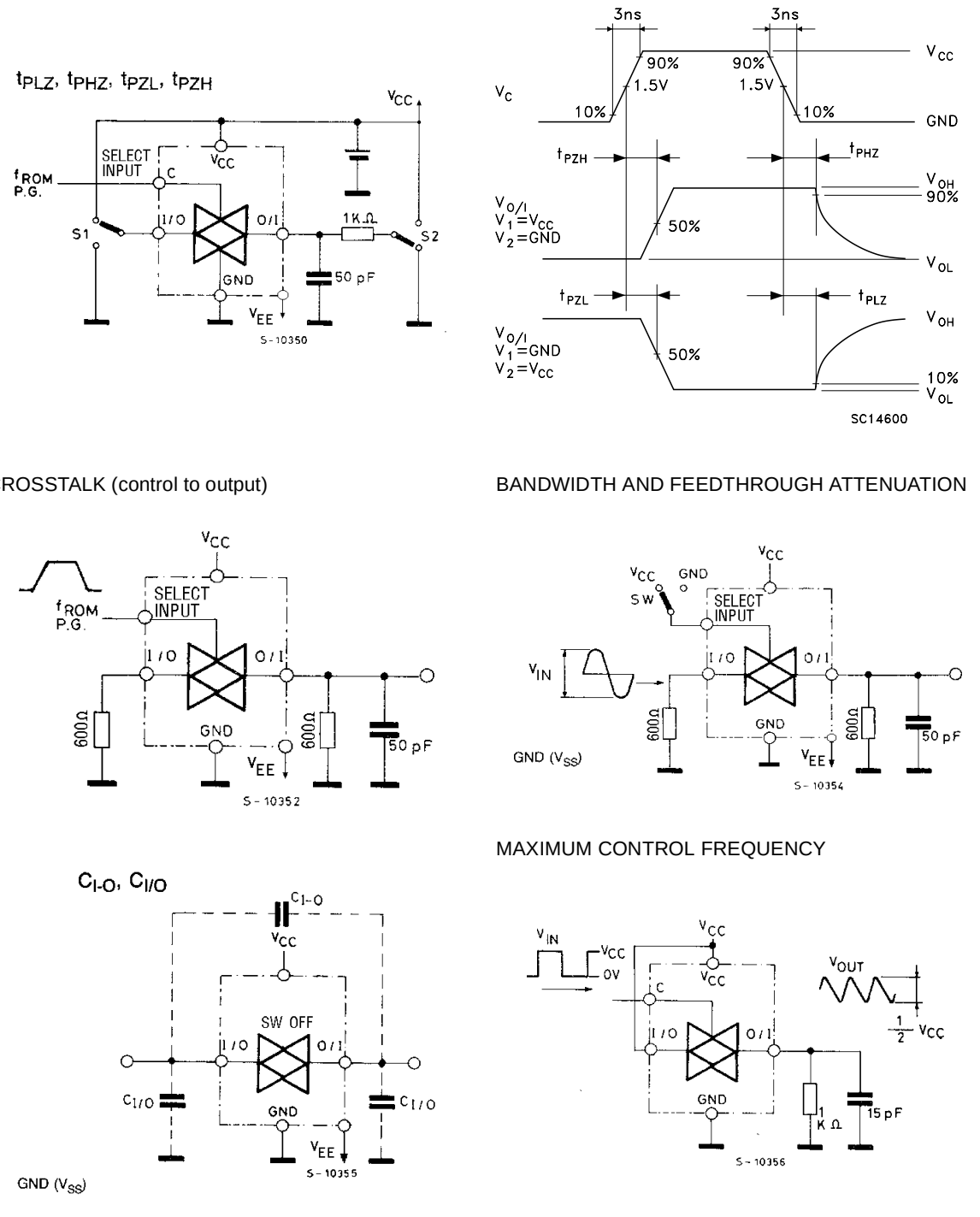

Figure 4: Channel Resistance (R_{ON})

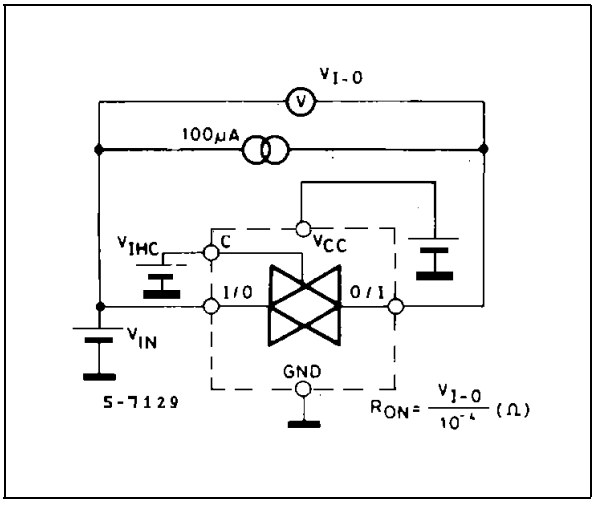

Figure 5: I_{CC} (Opr.)

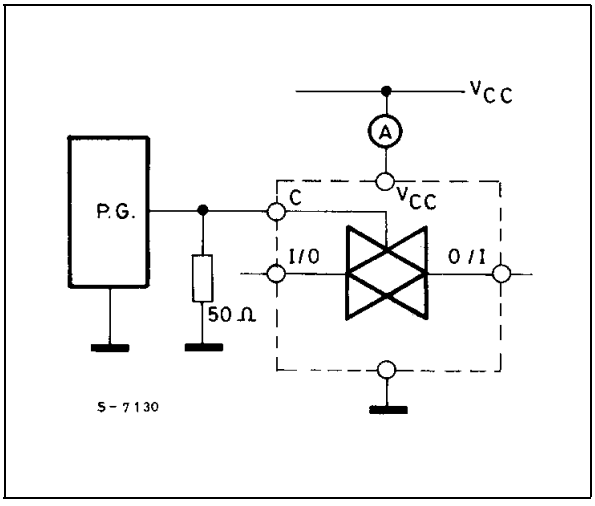

SO-14 MECHANICAL DATA

DIM.	mm.			inch		
	MIN.	TYP	MAX.	MIN.	TYP.	MAX.
A	1.35		1.75	0.053		0.069
A1	0.1		0.25	0.004		0.010
A2	1.10		1.65	0.043		0.065
B	0.33		0.51	0.013		0.020
C	0.19		0.25	0.007		0.010
D	8.55		8.75	0.337		0.344
E	3.8		4.0	0.150		0.157
e		1.27			0.050	
H	5.8		6.2	0.228		0.244
h	0.25		0.50	0.010		0.020
L	0.4		1.27	0.016		0.050
k	0°		8°	0°		8°
ddd			0.100			0.004

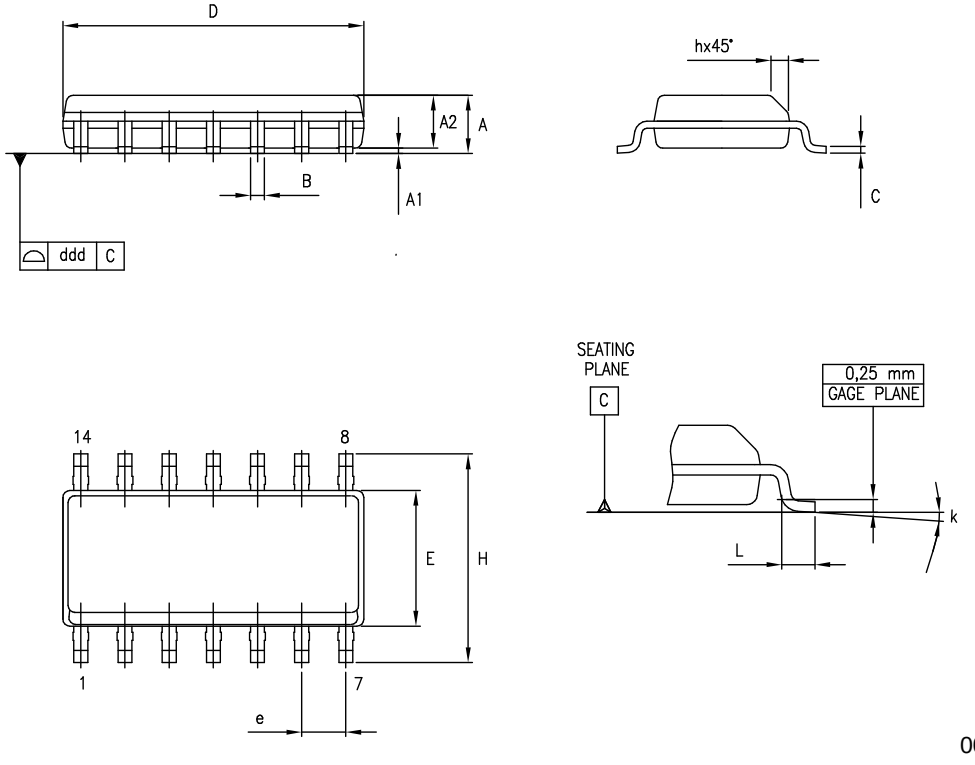

0016019D

TSSOP14 MECHANICAL DATA

DIM.	mm.			inch		
	MIN.	TYP	MAX.	MIN.	TYP.	MAX.
A			1.2			0.047
A1	0.05		0.15	0.002	0.004	0.006
A2	0.8	1	1.05	0.031	0.039	0.041
b	0.19		0.30	0.007		0.012
c	0.09		0.20	0.004		0.0089
D	4.9	5	5.1	0.193	0.197	0.201
E	6.2	6.4	6.6	0.244	0.252	0.260
E1	4.3	4.4	4.48	0.169	0.173	0.176
e		0.65 BSC			0.0256 BSC	
K	0°		8°	0°		8°
L	0.45	0.60	0.75	0.018	0.024	0.030

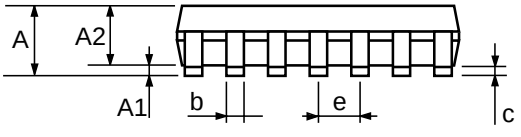

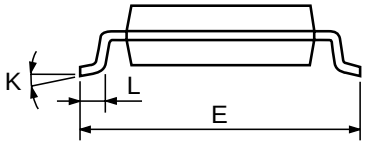

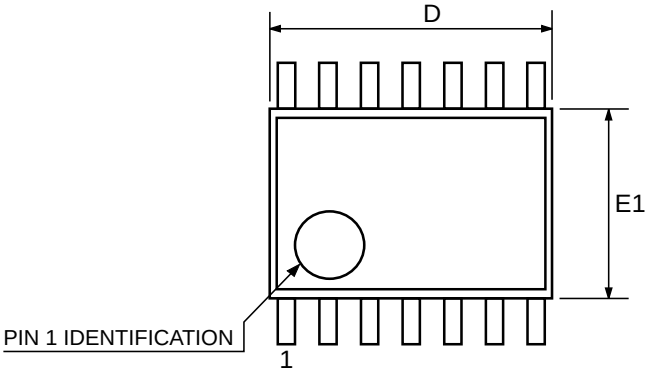

0080337D

Tape & Reel SO-14 MECHANICAL DATA

DIM.	mm.			inch		
	MIN.	TYP	MAX.	MIN.	TYP.	MAX.
A			330			12.992
C	12.8		13.2	0.504		0.519
D	20.2			0.795		
N	60			2.362		
T			22.4			0.882
Ao	6.4		6.6	0.252		0.260
Bo	9		9.2	0.354		0.362
Ko	2.1		2.3	0.082		0.090
Po	3.9		4.1	0.153		0.161
P	7.9		8.1	0.311		0.319

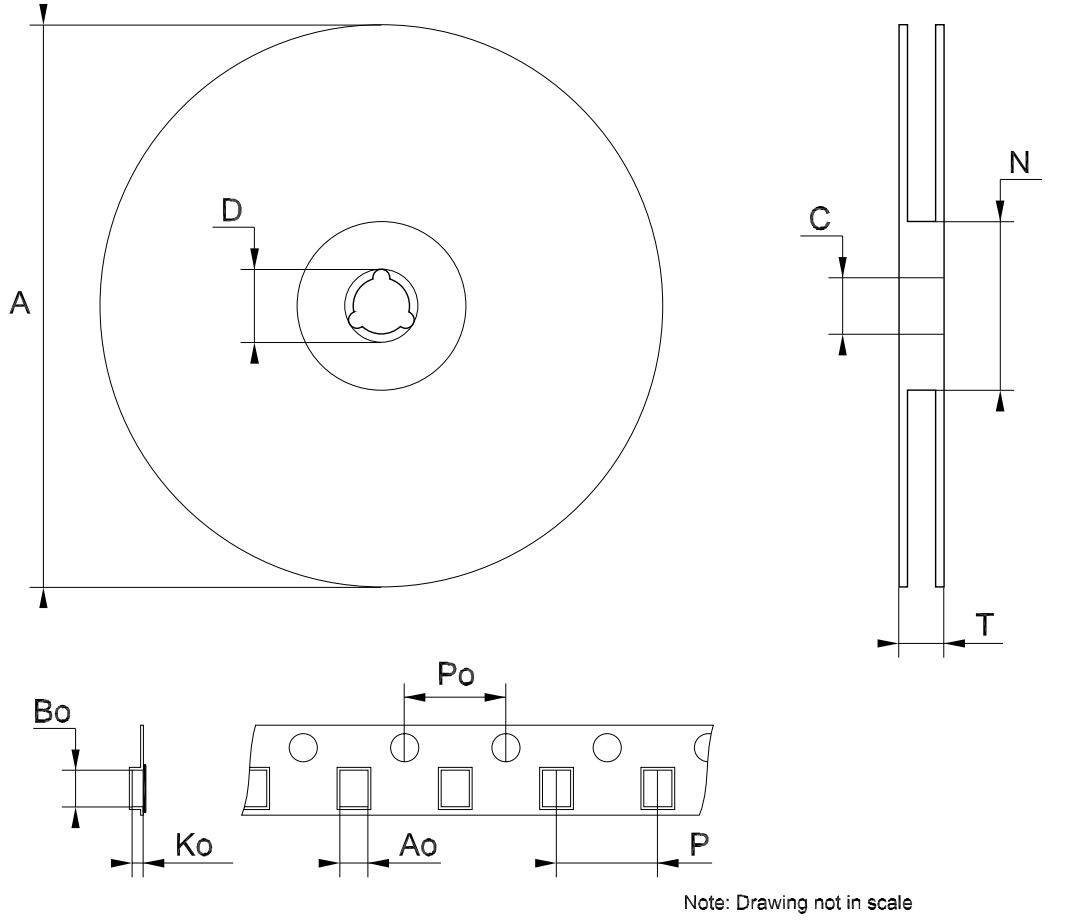

Note: Drawing not in scale

Tape & Reel TSSOP14 MECHANICAL DATA

DIM.	mm.			inch		
	MIN.	TYP	MAX.	MIN.	TYP.	MAX.
A			330			12.992
C	12.8		13.2	0.504		0.519
D	20.2			0.795		
N	60			2.362		
T			22.4			0.882
Ao	6.7		6.9	0.264		0.272
Bo	5.3		5.5	0.209		0.217
Ko	1.6		1.8	0.063		0.071
Po	3.9		4.1	0.153		0.161
P	7.9		8.1	0.311		0.319

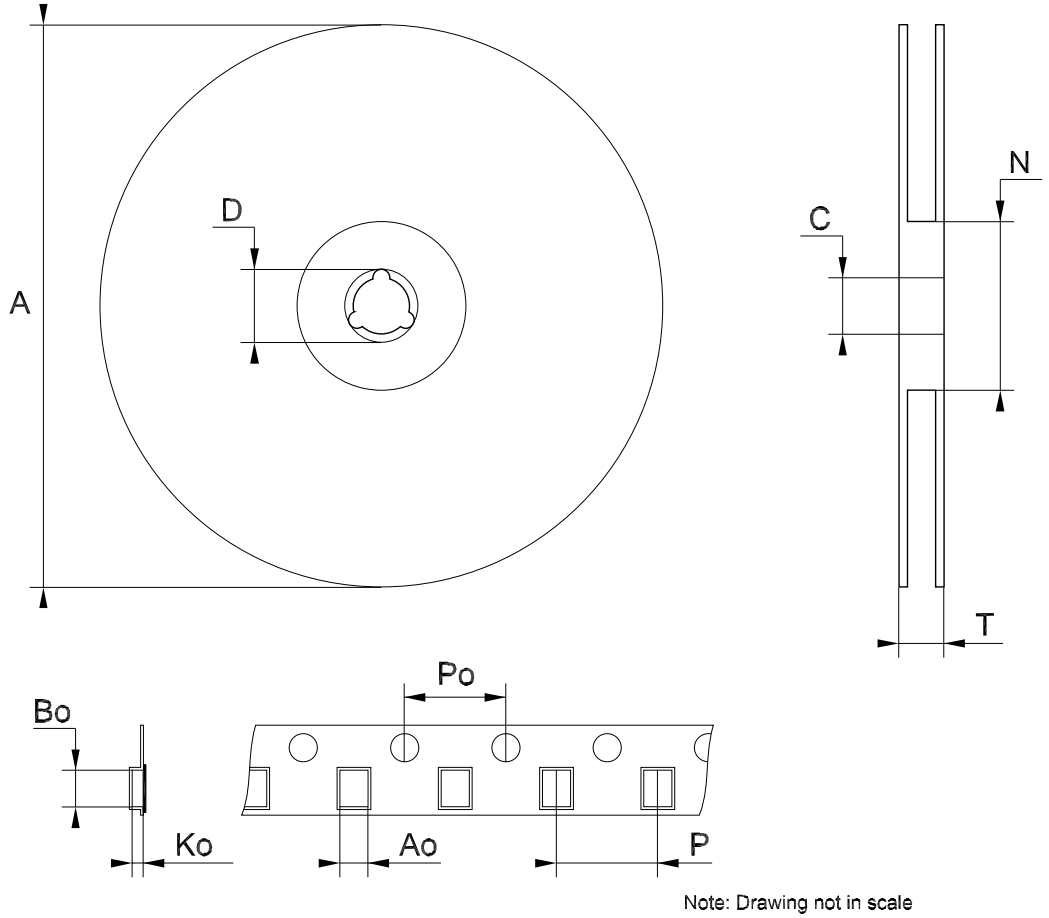

Note: Drawing not in scale

Table 9: Revision History

Date	Revision	Description of Changes
29-Jul-2004	8	Ordering Codes Revision - pag. 1.

Information furnished is believed to be accurate and reliable. However, STMicroelectronics assumes no responsibility for the consequences of use of such information nor for any infringement of patents or other rights of third parties which may result from its use. No license is granted by implication or otherwise under any patent or patent rights of STMicroelectronics. Specifications mentioned in this publication are subject to change without notice. This publication supersedes and replaces all information previously supplied. STMicroelectronics products are not authorized for use as critical components in life support devices or systems without express written approval of STMicroelectronics.

The ST logo is a registered trademark of STMicroelectronics

All other names are the property of their respective owners

© 2004 STMicroelectronics - All Rights Reserved

STMicroelectronics group of companies

Australia - Belgium - Brazil - Canada - China - Czech Republic - Finland - France - Germany - Hong Kong - India - Israel - Italy - Japan - Malaysia - Malta - Morocco - Singapore - Spain - Sweden - Switzerland - United Kingdom - United States of America

www.st.com